DC RING TYPE INDUCTIVE PROXIMITY SENSORS

10mm	10mm	10mm
○	○	○
-	-	-
PBT	PBT	PBT
○	●	●
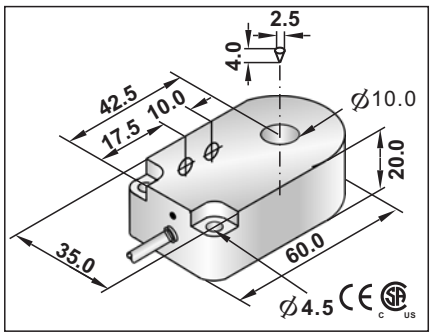	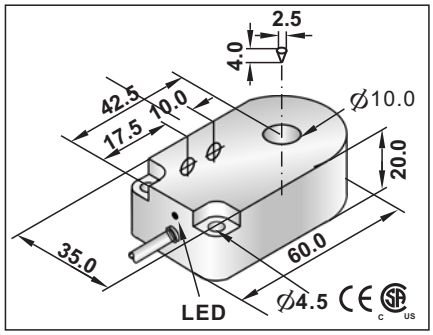	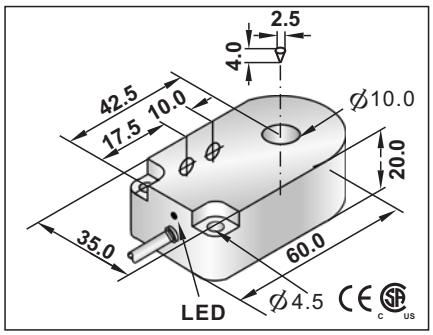
6~12VDC (Ripple≤10%)	10~60VDC (Ripple≤10%)	10~30VDC (Ripple≤10%)
-	-	-
≥2.2mA(off);≤0.1mA(on)	≤1.8mA	≤15mA
-	100mA	≤200mA
-	≤1.8mA	≤10uA
-	-	-
-	3mA	-
-	<6V at 100mA	≤1.5V at 200mA
2kHZ	2kHZ	2kHZ
-	-	-
15%	15%	15%
≤2% of Rated Operating Distance	≤2% of Rated Operating Distance	≤2% of Rated Operating Distance
IP67	IP67	IP67
-25°C to 70°C	-25°C to 70°C	-25°C to 70°C
-	±10%(sr)	±10%(sr)
D=2.5mm;L=4mm	D=2.5mm;L=4mm	D=2.5mm;L=4mm
-	Yes	Yes
-	Yes	Yes
-	120~150mA	220~280mA
RFI>3V/m / EFT>1KV / ESD>4KV (contact)	RFI>3V/m / EFT>1KV / ESD>4KV (contact)	RFI>3V/m / EFT>1KV / ESD>4KV (contact)
IEC 60947-5-2,Part 7.4.1 / IEC 60947-5-2,Part 7.4.2	IEC 60947-5-2,Part 7.4.1 / IEC 60947-5-2,Part 7.4.2	IEC 60947-5-2,Part 7.4.1 / IEC 60947-5-2,Part 7.4.2
		RRP2-R1020N-A3U2 1
		RRP2-R1020N-B3U2 2
		RRP2-R1020P-A3U2 3
		RRP2-R1020P-B3U2 4
		RRP2-R1020P-S4U2 6
		RRP2-R1020N-S4U2 5
	~~RRP2-R1020C-A2U2~~ 7	
	~~RRP2-R1020C-B2U2~~ 8	
~~RRP2-R1020NU~~ 21		
	Please see Page 18 for details and specifications of DC 2-Wire models on this page.	
4∅ 2X0.34	4 ∅ 2x0.34	4∅
approx.97g	approx.97g	approx.97g

Note:
Coming Soon : Part numbers with underline
In Preparation: Part numbers with a line through the middle

DC RING TYPE INDUCTIVE PROXIMITY SENSORS

15mm	15mm	15mm
○	○	○
-	-	-
PBT	PBT	PBT
○	●	●
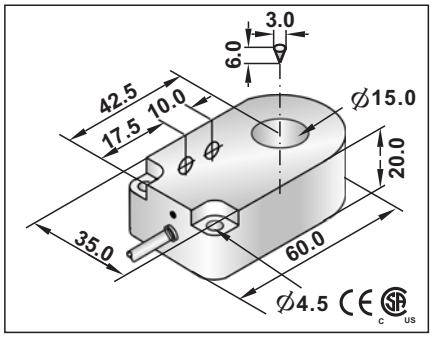	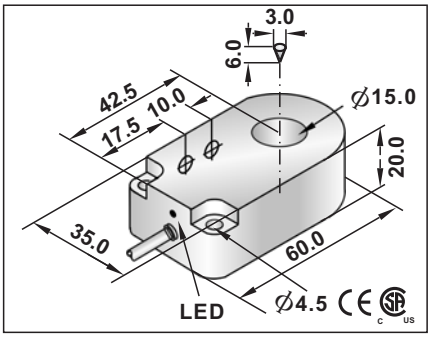	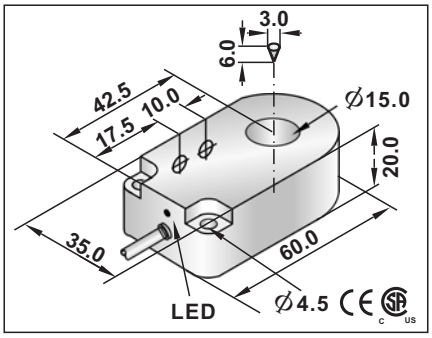
6~12VDC (Ripple≤10%)	10~60VDC (Ripple≤10%)	10~30VDC (Ripple≤10%)
-	-	-
≥2.2mA(off);≤0.1mA(on)	≤1.8mA	≤15mA
-	100mA	≤200mA
-	≤1.8mA	≤10uA
-	-	-
-	3mA	-
-	<6V at 100mA	≤1.5V at 200mA
1.5kHZ	1.5kHZ	1.5kHZ
-	-	-
15%	15%	15%
≤2% of Rated Operating Distance	≤2% of Rated Operating Distance	≤2% of Rated Operating Distance
IP67	IP67	IP67
-25°C to 70°C	-25°C to 70°C	-25°C to 70°C
-	±10%(sr)	±10%(sr)
D=3mm;L=6mm	D=3mm;L=6mm	D=3mm;L=6mm
-	Yes	Yes
-	Yes	Yes
-	120~150mA	220~280mA
RFI>3V/m / EFT>1KV / ESD>4KV (contact)	RFI>3V/m / EFT>1KV / ESD>4KV (contact)	RFI>3V/m / EFT>1KV / ESD>4KV (contact)
IEC 60947-5-2,Part 7.4.1 / IEC 60947-5-2,Part 7.4.2	IEC 60947-5-2,Part 7.4.1 / IEC 60947-5-2,Part 7.4.2	IEC 60947-5-2,Part 7.4.1 / IEC 60947-5-2,Part 7.4.2
		RRP2-R1520N-A3U2 1
		RRP2-R1520N-B3U2 2
		RRP2-R1520P-A3U2 3
		RRP2-R1520P-B3U2 4
		RRP2-R1520P-S4U2 6
		RRP2-R1520N-S4U2 5
	~~RRP2-R1520C-A2U2~~ 7	
	~~RRP2-R1520C-B2U2~~ 8	
~~RRP2-R1520NU~~ 21		
	Please see Page 18 for details and specifications of DC 2-Wire models on this page.	
4∅ 2X0.5	4∅ 2X0.5	4∅
approx.95g	approx.95g	approx.95g

Note:
Coming Soon : Part numbers with underline
In Preparation: Part numbers with a line through the middle

DC RING TYPE INDUCTIVE PROXIMITY SENSORS

21mm	21mm	21mm
○	○	○
-	-	-
PBT	PBT	PBT
○	●	●
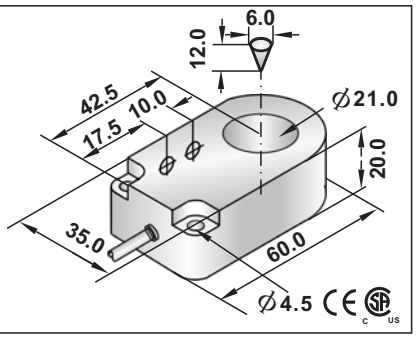	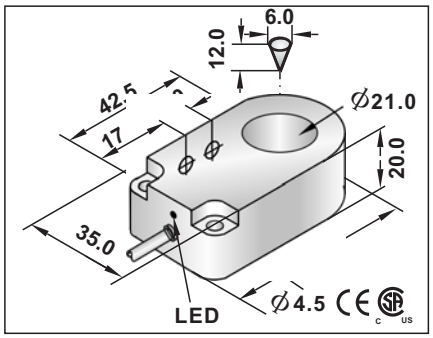	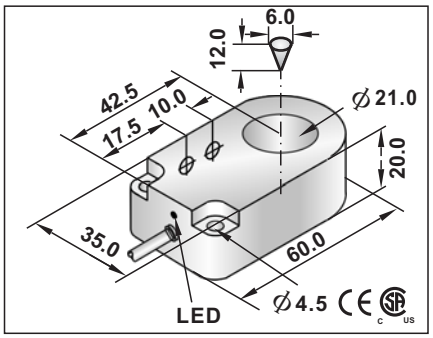
6~12VDC (Ripple≤10%)	10~60VDC (Ripple≤10%)	10~30VDC (Ripple≤10%)
-	-	-
≥2.2mA(off);≤0.1mA(on)	≤1.8mA	≤15mA
-	100mA	≤200mA
-	≤1.2mA	≤10uA
-	-	-
-	3mA	-
-	<6V at 100mA	≤1.5V at 200mA
1kHZ	1kHZ	1kHZ
-	-	-
15%	15%	15%
≤2% of Rated Operating Distance	≤2% of Rated Operating Distance	≤2% of Rated Operating Distance
IP67	IP67	IP67
-25°C to 70°C	-25°C to 70°C	-25°C to 70°C
-	±10%(sr)	±10%(sr)
D=6mm;L=12mm	D=6mm;L=12mm	D=6mm;L=12mm
-	Yes	Yes
-	Yes	Yes
-	120~150mA	220~280mA
RFI>3V/m / EFT>1KV / ESD>4KV (contact)	RFI>3V/m / EFT>1KV / ESD>4KV (contact)	RFI>3V/m / EFT>1KV / ESD>4KV (contact)
IEC 60947-5-2,Part 7.4.1 / IEC 60947-5-2,Part 7.4.2	IEC 60947-5-2,Part 7.4.1 / IEC 60947-5-2,Part 7.4.2	IEC 60947-5-2,Part 7.4.1 / IEC 60947-5-2,Part 7.4.2
		RRP2-R2120N-A3U2 1
		RRP2-R2120N-B3U2 2
		RRP2-R2120P-A3U2 3
		RRP2-R2120P-B3U2 4
		RRP2-R2120P-S4U2 6
		RRP2-R2120N-S4U2 5
	RRP2-R2120C-A2U2 7	
	RRP2-R2120C-B2U2 8	
~~RRP2-R2120NU~~ 21		
	Please see Page 18 for details and specifications of DC 2-Wire models on this page.	
4∅ 2X0.34	4∅ 2X0.34	4∅
approx.91g	approx.91g	approx.91g

Note:
Coming Soon : Part numbers with underline
In Preparation: Part numbers with a line through the middle

DC RING TYPE INDUCTIVE PROXIMITY SENSORS

43mm	43mm	43mm
○	○	○
-	-	-
PBT	PBT	PBT
○	●	●
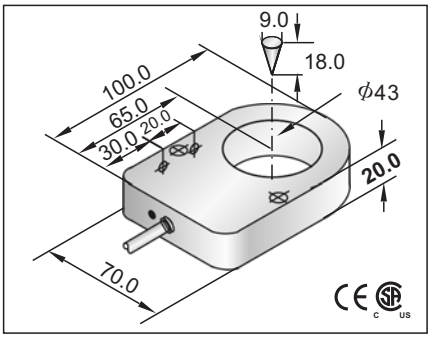	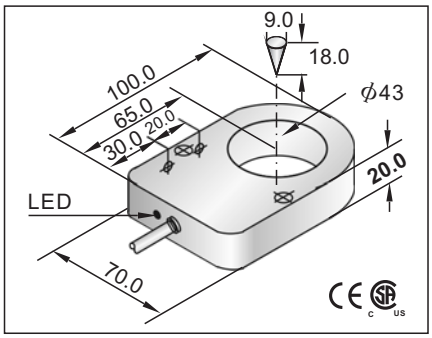	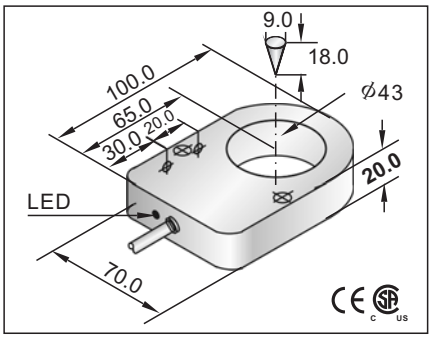
6~12VDC (Ripple≤10%)	10~60VDC (Ripple≤10%)	10~30VDC (Ripple≤10%)
-	-	-
≥2.2mA(off);≤0.1mA(on)	≤1.8mA	≤15mA
-	100mA	≤200mA
-	≤1.2mA	≤10uA
-	-	-
-	3mA	-
-	<6V at 100mA	≤1.5V at 200mA
500HZ	500HZ	500HZ
-	-	-
	15%	15%
≤2% of Rated Operating Distance	≤2% of Rated Operating Distance	≤2% of Rated Operating Distance
IP67	IP67	IP67
-25°C to 70°C	-25°C to 70°C	-25°C to 70°C
-	±10%(sr)	±10%(sr)
D=9mm;L=18mm	D=9mm;L=18mm	D=9mm;L=18mm
-	Yes	Yes
-	Yes	Yes
-	120~150mA	220~280mA
RFI>3V/m / EFT>1KV / ESD>4KV (contact)	RFI>3V/m / EFT>1KV / ESD>4KV (contact)	RFI>3V/m / EFT>1KV / ESD>4KV (contact)
IEC 60947-5-2,Part 7.4.1 / IEC 60947-5-2,Part 7.4.2	IEC 60947-5-2,Part 7.4.1 / IEC 60947-5-2,Part 7.4.2	IEC 60947-5-2,Part 7.4.1 / IEC 60947-5-2,Part 7.4.2
		RRP2-R4320N-A3U2 1
		RRP2-R4320N-B3U2 2
		RRP2-R4320P-A3U2 3
		RRP2-R4320P-B3U2 4
		RRP2-R4320P-S4U2 6
		RRP2-R4320N-S4U2 5
	RRP2-R4320C-A2U2 7	
	RRP2-R4320C-B2U2 8	
~~RRP2-R4320NU~~ 21		
	Please see Page 18 for details and specifications of DC 2-Wire models on this page.	
5.8∅ 2X0.5	5.8∅ 2X0.5	5.8∅
approx.216g	approx.216g	approx.216g

Note:
Coming Soon : Part numbers with underline
In Preparation: Part numbers with a line through the middle